Revised 10/18/22

Installation Instructions

Billet "Run Ready" Distributors (689-Series)

Parts included:
Complete Distributor
Ignition Wire Retainer
Wire Retainer Screws
Advance Bushings
Advance Springs
Gray Jumper Wire (Some models only)
Vacuum Advance Lockout (some models only)
Gasket (if applicable)
Wire Harness

Please read these instructions before installing!

Note: A relay MUST be used for 12V+ power supply to ensure clean steady voltage. Failure to use a relay may result in module failure and will void warranty!

The 689001/BK (Chevrolet) is a "slip collar" design. This allows for varying deck heights and accurate engagement with the gear on the camshaft. Follow the setup instructions on page 3.

You should always disconnect the battery, negative lead first, before working on the ignition system. When you are done reconnect the battery installing the positive lead first.

The drive gear installed on these distributors are compatible with flat tappet camshafts only. For hydraulic or mechanical roller, a steel or bronze gear may be required. See the list at the end of this document for shaft sizes.

1. If the distributor to be replaced has not been removed from the engine, remove the cap. Do not remove the spark plug wires at this time.

2. Crank the engine slowly until the rotor blade aims at a fixed point on the engine or firewall. Note this point for future reference.

3. Unplug all external connectors from the distributor.

4. Now put the existing cap back on and note and mark which spark plug wire the rotor (blade) is pointing at. Then number the wires according to cylinder and remove the wires. If in doubt you can leave the wires connected to the old cap and transfer them to the new cap and distributor later in the process (see point # 9).

5. Loosen and remove the distributor hold-down bolt and clamp. Lift the old distributor out. At this point the rotor may spin and move from its position. This is because of the distributor gear (some applications).

6. Install the gasket (if applicable) and lower the new distributor into position. The rotor should be aimed at the same fixed point as was the rotor from the old distributor. After the new distributor has been lowered into place, you may find that it hasn't seated firmly against the intake manifold or block. This indicates that the lower end of the distributor shaft is not properly aligned with the oil pump drive rod. Do not attempt to force the distributor into position.

7. Either remove the distributor and use a long screwdriver to turn the oil pump shaft until it properly aligns with the distributor shaft, or reinstall the hold-down clamp and thread the bolt just enough to exert a very slight pressure against the distributor. Manually rotate the engine until the distributor drops down into place.

8. With the distributor properly seated, tighten the hold-down bolt just enough so that the distributor is held in place, but can still be rotated with a little effort.

9. Remove the plug wires one at a time from the old cap and install them in the corresponding positions of the new cap. After all wires have been transferred, verify that the wire in the terminal post that is aligned with the rotor leads to number one cylinder. If you are unsure of cylinder number position or firing order, this information can be found in the service manual that covers your particular engine. Re-install the distributor cap.

"Run Ready" vacuum advance distributor wiring

The "Run Ready" 3-wire distributors do not require an ignition box to run, however one may be used.
There are 3 wires coming out of the distributor, terminating in a WeatherPack connector. The wire colors are Brown, Red, and Black. These plug into the mating 3-pin connector supplied with the distributor.

Wire as follows:

3-pin Weatherpack plug:

Red: Connect to Coil (+) **Note: A relay MUST also be used for 12V+ power to the coil to ensure clean steady voltage. Failure to use a relay may result in module failure and will void warranty! See instructions below.**

Brown (Yellow on some) : Connect to Coil (-)

Black: Connect to frame or chassis ground (-)

Separate Gray wire (some models only) : Clean tach signal (Also used to set built-in rev limiter)

Note: Check to see that your coil location will reach the distributor when wired.

Note: For best performance, use a coil with 0.70 Ohms primary resistance or less.

Note: To install with a CD ignition box, please refer to the manufacturer's instructions.

Rev limiter and tachometer

Tach Signal: The "Run Ready" distributors (some models only) feature a gray tach output wire that provides a clean signal for most tachs and some aftermarket EFI systems. The signal is 12V square wave. This wire is also used for programming the built-in rev limiter.

Rev Limiter: The built-in rev limiter (some models only) can be easily adjusted from 2,000 to 10,000 RPM. The default is 10,000 RPM. To set the rev-limiter, run the engine to half the desired limit, then ground the gray wire (a jumper is supplied) for approximately 1 second.* (desired RPM limit 6,000 RPM = ground gray wire at 3,000 RPM) The tach will then display the programmed RPM for 2 seconds. If it does not, repeat using an alternate ground. Once programmed, every time the key is turned to the "On" position, the tach will display the rpm limit. An optional switch can be installed connecting the gray wire to ground for easy changes in the future.

***Note**: The tach will go to "0" while grounded.

****Not**e: The RPM confirmation will only display if the tach is connected using the gray wire.

Vacuum advance

Some models are equipped with a vacuum advance option for increased fuel economy. This feature can be locked out using the included lockout plate (some models). See below.

Installing the vacuum advance lock-out (some models only)

1. Remove the two screws that mount the vacuum advance canister.
2. Rotate the snap ring that secures the magnetic pickup mounting plate, so it is accessible, then remove.
3. Lift the mounting plate slightly, and slide out the vacuum advance canister.
4. Install the lockout plate in place of the canister.
5. Install the screws and washers through the lockout plate and tighten.
6. It is important to make sure the pickup plate is parallel with the housing of the distributor. If it is crooked or slanted, the reluctor may contact the pickup. Check the clearance by rotating the distributor shaft. If necessary, you may need to install a shim(s) under the lockout plate to correctly position the pickup plate.

Note: Plug the original vacuum advance hose.

Mechanical advance

There are 3 optional advance bushings included in the hardware package. (28°, 25°, & 18°) The distributor is supplied with a 21° bushing installed. If a different amount of mechanical advance is desired, follow the procedure below to change the bushings. It is easiest to do this while the distributor is out of the vehicle.

How to change the mechanical advance bushings

1. Take off the locknut and washer at the bottom of the advance assembly, at the bottom of the bushing pin.
2. The bushing will slide off.
3. Select the new bushing and install.
4. Install the washer and locknut.

How to lock the mechanical advance

1. Remove the springs, weights and the advance stop bushing from the advance assembly.
2. Remove the roll-pin and gear at the bottom of the distributor.
3. Lift the shaft at least two inches out of the housing, but do not remove the shaft.
4. Turn the shaft 180° so the bushing pin slides into the small hole, on the advance plate.
5. Put the locknut and washer back onto the advance bushing pin, which locks the advance in place.
6. Install the drive gear and roll-pin.

Adjusting the slip collar

Before installing the 689001 Run-Ready Distributor, the slip collar must be set.

1. Place the gasket on the housing and loosen the slip collar. Install the distributor into the engine until it bottoms out.
2. Then, raise the distributor 0.010" - 0.030", slide the slip collar down and tighten it securely.

Checking gear mesh

Always check for proper mesh between the cam gear and distributor gear.

1. Coat the distributor gear with moly grease and install the distributor.
2. Crank the engine over several times.
3. Remove the distributor and inspect the gear pattern. Proper mesh will leave an even pattern in the middle area of the gear. Adjust the slip collar as necessary.

Checking oil pump to distributor shaft engagement

Proper engagement between the distributor shaft and the oil pump shaft is critical. The slot of the distributor shaft should fit into the groove of the oil pump shaft by at least 1/4".

1. Measure the distance between the base of the slip collar to the tip of the distributor shaft.
2. Using a straight edge, measure the distance from the intake manifold contact flange to the top of the oil pump intermediate shaft.
3. Subtract the two measurement and the difference is the overlap. If there is not enough, or too much clearance, a different intermediate shaft may be required.

Relay connection provides clean full 12V from the battery directly to the red (power) wire on the distributor.

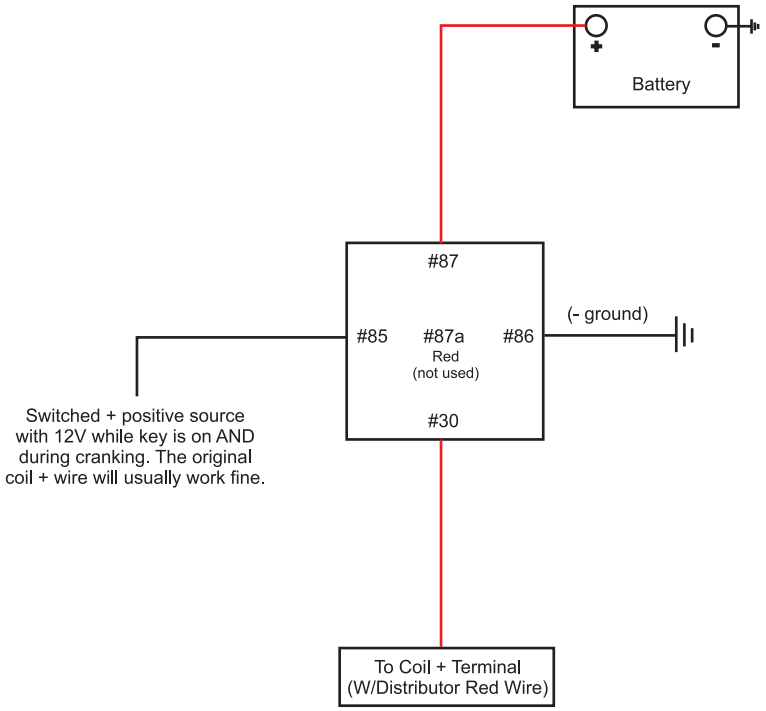

Shaft sizes for distributor gears:

689000/689000BK - .500"
689001 - .500"
689002/689002BK - .467" or .491" (PW #684039 or 686212 gear available)
689003/689003BK - Can not be changed
689004/689004BK - Can not be changed
689005/689005BK - .467"